E13RG62424LWAM450-N 8-BIT MCU Interface

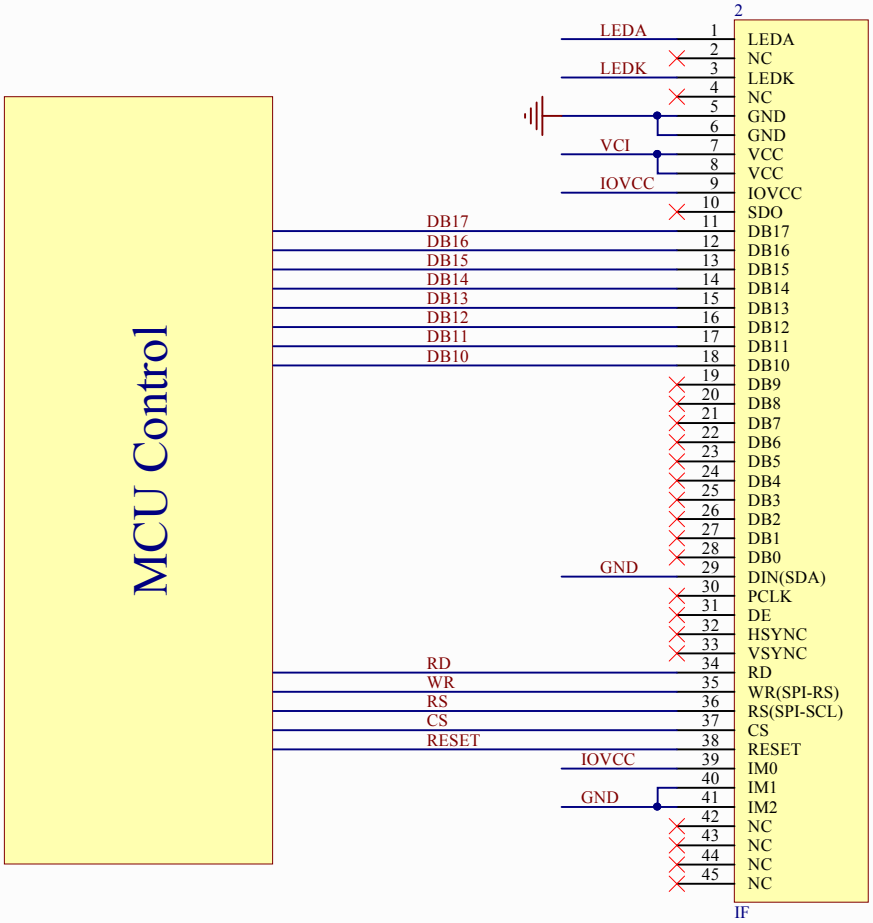

FOCUS LCDs
LCDs MADE SIMPLE®