FOCUS LCDs
LCDs MADE SIMPLE®

Ph. 480-503-4295 | LCD@FocusLCDs.com

TFT | OLED | CHARACTER | GRAPHIC | UWVD | SEGMENT | CUSTOM

Character Display Module

Part Number

C202AS-BW-LW63

Overview:

- 20x2 Character LCD
- STN Blue
- 116x37 mm Module
- I2C, SPI or RS232/TTL Interface(s)
- White LED Backlight
- Transmissive
- Wide Temp Range
- 3.3V
- LCD IC: ST7066U and PIC16F690
- RoHS Compliant

Character LCD Features

Characters: 20x2
Interface(s): I2C, SPI, RS232/TTL
RoHS Compliant

General Information Items	Specification	Unit	Note
	Main Panel		
Viewing Area (VA)	83.0 (H) x 18.6 (V)	mm	--
LCD Type	STN Blue	--	--
Viewing Angle	6:00	O'Clock	--
Polarizer	Transmissive	--	--
Backlight Type	LED	--	--
Backlight Color	White	--	--
LCD IC	ST7066U and PIC16F690	--	--
Character Height	5.55	mm	--
Operating Temperature	-20 to +70	°C	--
Storage Temperature	-30 to +80	°C	--

Mechanical Information

Item		Min.	Typ.	Max.	Unit	Note
Module Size	Horizontal (H)	--	116.0	--	mm	--
	Vertical (V)	--	37.0	--	mm	--
	Depth (D)	--	13.5	--	mm	--
Weight		--	54	--	g	Approximate

1. Outline Dimensions

Rev.	Description	Date
1.0	First	03/22/2023

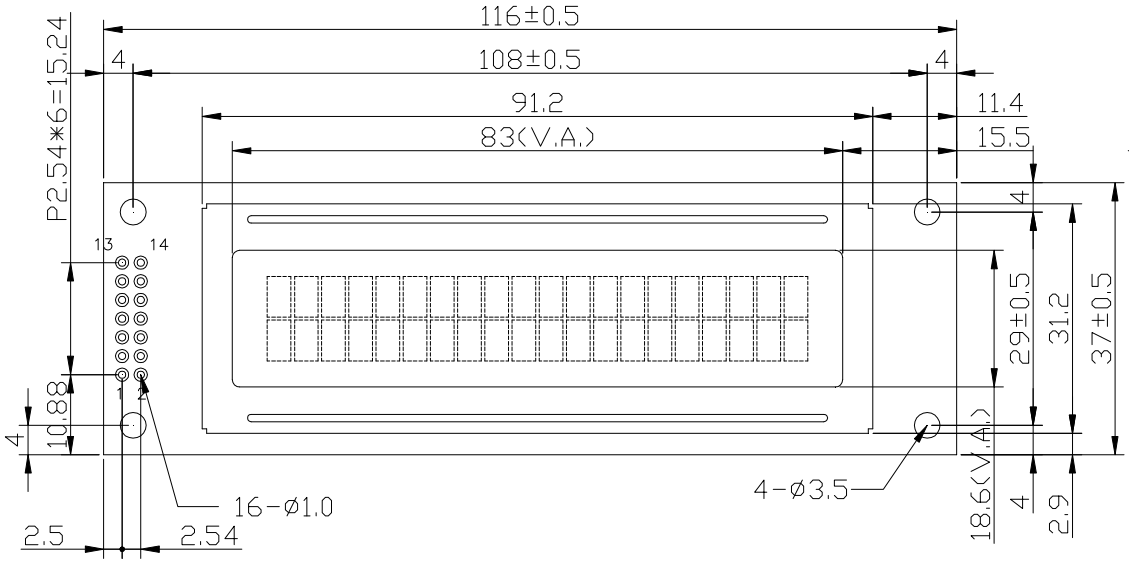

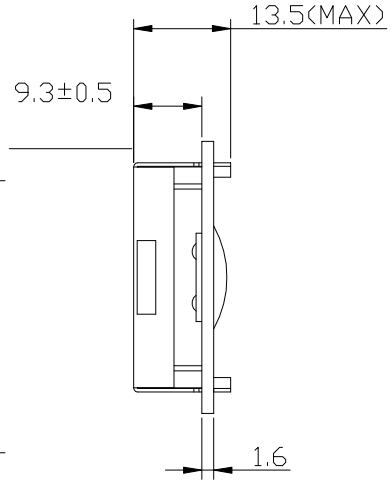

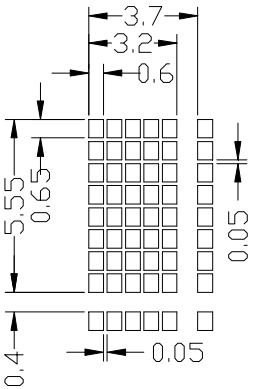

Pin NO	Symbol
1	RX
2	VSS
3	VDD
4	NC
5	SPISS
6	SDO
7	SCK/SCL
8	SDI/SDA
9	VSS
10	VDD
11	NC
13	NC
13	NC
14	NC

NOTES:

1. DISPLAY DRIVE: DUTY 1/16, BIAS 1/4, VLCD 3.3V, VDD 3.3V
2. DISPLAY MODE: STN BLUE, TRANSMISSIVE, NEGATIVE
3. LCM DRIVER IC: ST7066U AND PIC16F690 OR EQUIVALENTS
4. OPERATING TEMPERATURE: -20°C TO +70°C
5. STORAGE TEMPERATURE: -30°C TO +80°C
6. VIEWING DIRECTION: 6:00
7. BACKLIGHT: WHITE EDGE
8. ROHS COMPLIANT

DISCLAIMER

DO NOT SCALE OFF THIS DRAWING. All dimensions are given in good faith and believed to be correct. These drawings are for general presentation purposes only. No responsibility can be taken with any errors found by measuring off this drawing. The Focus LCDs PDF drawing should be referenced as the master file.

PROPRIETARY AND CONFIDENTIAL

THE INFORMATION CONTAINED IN THIS DRAWING IS THE SOLE PROPERTY OF FOCUS DISPLAY SOLUTIONS, INC. ANY REPRODUCTION IN PART OR AS A WHOLE WITHOUT THE WRITTEN PERMISSIONS OF FOCUS DISPLAY SOLUTIONS, INC. IS PROHIBITED

Model Name: C202AS-BW-LW63			
General Tol: ±0.3			
Approvals	Date	Drawing No.:	Scale:
DWN:			
CHK:		Size:	Unit: mm / Page: 1/1
APP:			

2. Absolute maximum ratings

Item	Symbol	Standard			Unit
Power voltage	VDD-VSS	0	-	7.0	V
Input voltage	V_{IN}	VSS	-	VDD	
Operating temperature range	V_{OP}	-20	-	+70	℃
Storage temperature range	V_{ST}	-30	-	+80	

3. Interface pin description

Pin no.	Symbol	External connection	Function
1	RX	O	RS232 Serial input port
2	VSS	Power supply	Signal ground for LCM (GND)
3	VDD		Power supply for logic (+3.3V) for LCM
4	NC		
5	SPISS	I	SPITM slave select input
6	SDO	O	SPITM data output
7	SCK/SCL	I	SCK: SPITM clock SCL: I2CTM clock
8	SDI/SDA	I	SDI: SPITM data input SDA: I2CTM data input
9	VSS	Power supply	Signal ground for LCM (GND)
10	VDD		Power supply for logic (+3.3V) for LCM

4. Optical characteristics

STN type display module (Ta=25℃, VDD=3.3V)

Item		Symbol	Condition	Min.	Typ.	Max.	Unit
Viewing angle (6 0'clock)	Top--Bottom	θ	Cr≥2	-60	-	35	deg
	Left--Right	Φ		-40	-	40	
Contrast ratio		CR	-	-	6	-	-
Response time	Rise	tr		-	150	250	ms
	Fall	tf		-	150	250	

5. Electrical characteristics

DC characteristics

Parameter	Symbol	Conditions	Min.	Typ.	Max.	Unit
Supply voltage for LCD	VDD - V0	Ta=25℃	3.1	3.3	3.5	V
Input voltage	VDD		3.1	3.3	3.5	
Supply current	IDD	Ta=25℃, VDD=3.3V	1.0	2.0	2.5	mA
Input leakage current	ILKG		-	-	2.0	uA
"H" level input voltage	VIH		2.2	-	VDD	V
"L" level input voltage	VIL	Twice initial value or less	0	-	0.6	
"H" level output voltage	VOH	LOH=-0.25mA	2.4	-	-	
"L" level output voltage	VOL	LOH=1.6mA	-	-	0.4	

Backlight information

Parameter	Symbol	Conditions	Min.	Typ.	Max.	Unit
Forward voltage	Vf	If=30mA	2.7	3.0	3.2	V
Supply Current	ILED	Ta=25℃	15	30	50	mA
Leakage current	IR	Vr=3.3V	-	-	10	uA
Reverse voltage	VR	Ta=25℃	-	5	-	V
Chromaticity coordinates	X		0.25	-	0.30	-
	Y		0.26	-	0.31	

6. Communications

I2C Communication

To enter the I^2C mode, a jumper is place on R1 of the interface board and 2 pull-up resistors (nominal value of 1K to 10K Ohm), must be placed on SDA and SCK communication lines, R7 and R8.
The default I^2C address is 50 (32 hex). The I^2C address can be changed to any 8-bit value by command function, with the exception that the LSB (least significant bit) must always be '0'. Once the I^2C address has been changed, it will be saved in the system memory, and it will revere back to the default address if either RS232 or SPI protocol is selected.
The I2C interface can receive data at up to 400KHz-clock rate.

SPI Communication

To enter the SPI mode, a jumper is placed on R2 of the interface board.
The SPI mode has a normally high-level idle clock; data sampled on the rising edge of the clock and Slave Select is enabled.

RS232 Communication

To enter the RS232 mode, both jumpers, R1 and R2 are removed.
The RS232 signal must be 3.3V, TTL compatible. The communication format is 8-bit data, one stop bit, no parity and no hand shaking. The default BAUD rate is 9600, and it is changeable with a command function, once the BAUD rate is changed, it will be saved in the system memory, and it can be revered back to default BAUD rate if either I^2C or SPI protocol is selected.

Changing the I2C Slave Address

Syntax hexadecimal 0xFE 0x62 [adr]

Parameter

Parameter	Length	Description
[adr]	1 byte	New I^2C address, 0x00 – 0xFE The LSB is always '0'.

Description This command sets the I2C address, the address must be an even number, (LSB = 0). The address change requires 20 microseconds to take effect; therefore, the subsequent input must have an appropriate delay. The default I2C address can be restored if SPI or RS232 is selected as the communication mode.

Default 0x50

Changing BAUD Rate

Syntax hexadecimal 0xFE 0x61 [baud]

Parameter

Parameter	Length	Description
[baud]	1 byte	New RS232 BAUD Rate, 1 - 8

Description This command sets the RS232 BAUD rate, the single byte parameter select the desired BAUD rate as in the table below. The new BAUD rate requires 20 microseconds to take effect, therefore, the subsequent input must have an appropriate delay. The default BAUD rate can be restored if I2C or SPI is selected as the communication mode. Illegal parameter input will be discarded.

Default 9600 BAUD

Parameter	BAUD
1	300
2	1200
3	2400
4	9600
5	14400
6	19.2K
7	57.6K
8	115.2K

7. Built-In Functions

Introduction

There are several built-in functions in the serial interface to facilitate the LCD control, These functions eliminate the needs for end user to understand the ST7066U instruction set and timing requirements. It also provides control for features that are not accessible with a serial connection.

Turn On Display

Syntax hexadecimal 0xFE 0x41

Parameter

Parameter	Length	Description
None	None	Turn on LCD screen

Description This command turns on the LCD display screen, the display text is not altered.
Default LCD screen is on

Turn Off Display

Syntax hexadecimal 0xFE 0x42

Parameter

Parameter	Length	Description
None	None	Turn off LCD screen

Description This command turns off the LCD display screen, the display text is not altered.
Default LCD screen is on

Set Cursor Position

Syntax hexadecimal 0xFE 0x45 [pos]

Parameter

Parameter	Length	Description
[pos]	1 byte	Put cursor at location specified by [pos], 0x00 to 0x67

Description This command moves the cursor to a specified location where the next character will be displayed. A typical cursor position for a 4-line display is show below; a cursor position outside these ranges will not be viewable.

	Column1	Column20
Line1	0x00	0x13
Line 2	0x40	0x53
Line 3	0x14	0x27
Line 4	0x54	0x67

Default After a reset, the cursor is on position 0x00.

Home Cursor

Syntax hexadecimal 0xFE 0x46

Parameter

Parameter	Length	Description
None	None	Position cursor at line 1 column 1

Description This command moves the cursor to line 1, column 1 of the LCD screen, the display text is not altered.

Default None

Turn On Underline Cursor

Syntax hexadecimal 0xFE 0x47

Parameter

Parameter	Length	Description
None	None	Turn on underline cursor

Description This command turns on the underline cursor, the cursor position is where the next character will appear.

Default The underline cursor is off.

Turn Off Underline Cursor

Syntax hexadecimal 0xFE 0x48

Parameter

Parameter	Length	Description
None	None	Turn off underline cursor

Description This command turns off the underline cursor.

Default The underline cursor is off.

Move Cursor Left One Space

Syntax hexadecimal 0xFE 0x49

Parameter

Parameter	Length	Description
None	None	Move cursor left 1 space

Description This command moves the cursor position left 1 space, regardless the cursor is displayed or not, and the displayed character is not altered.

Default None

Move Cursor Right One Space

Syntax hexadecimal 0xFE 0x4A

Parameter

Parameter	Length	Description
None	None	Move cursor right 1 space

Description This command moves the cursor position right 1 space, regardless the cursor is displayed or not, and the displayed character is not altered.

Default None

Turn On Blinking Cursor

Syntax hexadecimal 0xFE 0x4B

Parameter

Parameter	Length	Description
None	None	Turn on the blinking cursor

Description This command turns on the blinking cursor, both the cursor and the character on the cursor will blink.

Default The blinking cursor is off.

Turn Off Blinking Cursor

Syntax hexadecimal 0xFE 0x4C

Parameter

Parameter	Length	Description
None	None	Turn off the blinking cursor

Description This command turns off the blinking cursor.

Default The blinking cursor is off.

Back Space

Syntax hexadecimal 0xFE 0x4E

Parameter

Parameter	Length	Description
None	None	Move cursor back one space and delete the character on the cursor.

Description This command is destructive backspace, the cursor is moved back one space and the character on the cursor is deleted.

Default None.

Clear Screen

Syntax hexadecimal 0xFE 0x51

Parameter

Parameter	Length	Description
None	None	Clear LCD and move cursor to line 1 column 1.

Description This command clears the entire display and place the cursor at line 1 column 1.

Default None.

Set Display Contrast

Syntax hexadecimal 0xFE 0x52 [contrast]

Parameter

Parameter	Length	Description
[contrast]	1 byte	Set the display contrast, value between 1 to 50

Description This command set the LCD character display contrast, the contrast setting is between 1 to 50, where 50 is the highest contrast.

Default Default contrast value is 40.

Set Backlight Brightness

Syntax hexadecimal 0xFE 0x53 [brightness]

Parameter

Parameter	Length	Description
[brightness]	1 byte	Set the LCD backlight brightness level, value between 1 to 8

Description This command set the LCD display backlight brightness level, the value is between 1 to 8.

Default Default contrast value is 5.

Load Custom Characters

Syntax hexadecimal 0xFE 0x54 [addr] [d0 …d7]

Parameter

Parameter	Length	Description
[addr]	1 byte	Custom character address, 0 – 7
[D0..D7]	8 bytes	Custom character pattern bit map

Description There are space for eight user defined custom characters, this command load the custom character into one of the eight locations. The custom character pattern is bit mapped into 8 data bytes, the bit map for Spanish character '¿' is shown in table below, to display the custom character, user simply enter the address of the character (0 to 8).

Default None.

Bit	7	6	5	4	3	2	1	0	Hex
Byte 1	0	0	0	0	0	**1**	0	0	0x04
Byte 2	0	0	0	0	0	0	0	0	0x00
Byte 3	0	0	0	0	0	**1**	0	0	0x04
Byte 4	0	0	0	0	**1**	0	0	0	0x08
Byte 5	0	0	0	**1**	0	0	0	0	0x10
Byte 6	0	0	0	**1**	0	0	0	**1**	0x11
Byte 7	0	0	0	0	**1**	**1**	**1**	0	0x0E
Byte 8	0	0	0	0	0	0	0	0	0x00

Shift Display to the Left

Syntax hexadecimal 0xFE 0x55

Parameter

Parameter	Length	Description
None	None	Shift the LCD screen to the left one Place.

Description This command shifts the display one place to the left, the cursor position also moves with the display, and the display data is not altered.

Default None

Shift Display to the Right

Syntax hexadecimal 0xFE 0x56

Parameter

Parameter	Length	Description
None	None	Shift the LCD screen to the right one Place.

Description This command shifts the display one place to the right, the cursor position also moves with the display, and the display data is not altered.

Default None

Display Firmware Version Number

Syntax hexadecimal 0xFE 0x70

Parameter

Parameter	Length	Description
None	None	Display the firmware version number.

Description This command displays the micro-controller firmware version number.

Default None.

Display RS232 Baud Rate

Syntax hexadecimal 0xFE 0x71

Parameter

Parameter	Length	Description
None	None	Display Baud Rate

Description This command displays the current RS232 BAUD rate.

Default None.

Display I²C Address

Syntax hexadecimal 0xFE 0x72

Parameter

Parameter	Length	Description
None	None	Display I²C Address

Description This command displays the current I²C slave address.

Default None.

Direct ST7066U Command

Syntax hexadecimal 0xFE 0xFE [cmd]

Parameter

Parameter	Length	Description
[cmd]	1 byte	Direct interface to the LCD controller.

Description This command is for advanced programmer, it allows LCD instruction to send directly to the ST7066U controller.

Default None.

ASCII TEXT

To display normal text, just enter its ASCII number, a number from 0x00 to 0x07 displays the user defined custom character, 0x20 to 0x7F displays the stand set of characters. And numbers from 0xA0 to 0xFD display characters and symbols that are factory-masked on the ST7066U controller and 0xFE is reserved for function command.

Command Summary

Prefix	CMD	Param	Description
0xFE	0x41	None	Display on
0xFE	0x42	None	Display off
0xFE	0x45	1 Byte	Set cursor
0xFE	0x46	None	Cursor home
0xFE	0x47	None	Underline cursor on
0xFE	0x48	None	Underline cursor off
0xFE	0x49	None	Move cursor left one place
0xFE	0x4A	None	Move cursor right one place
0xFE	0x4B	None	Blinking cursor on
0xFE	0x4C	None	Blinking cursor off
0xFE	0x4E	None	Backspace
0xFE	0x51	None	Clear screen
0xFE	0x52	1 Byte	Set contrast
0xFE	0x53	1 Byte	Set backlight brightness
0xFE	0x54	9 Byte	Load custom character
0xFE	0x55	None	Move display one place to the left
0xFE	0x56	None	Move display one place to the right
0xFE	0x61	1 Byte	Change RS232 BAUD rate 232
0xFE	0x62	1 Byte	Change I2C address
0xFE	0x70	None	Display firmware version number
0xFE	0x71	None	Display RS232 BAUD rate
0xFE	0x72	None	Display I2C address
0xFE	0xFE	1 Byte	Send control byte to

8. Standard character pattern

Lower 4 Bits \ Upper 4 Bits	0000	0001	0010	0011	0100	0101	0110	0111	1000	1001	1010	1011	1100	1101	1110	1111
xxxx0000	CG RAM (1)			0	@	P	`	p				ー	タ	ミ	α	p
xxxx0001	(2)		!	1	A	Q	a	q			。	ア	チ	ム	ä	q
xxxx0010	(3)		"	2	B	R	b	r			「	イ	ツ	メ	ß	θ
xxxx0011	(4)		#	3	C	S	c	s			」	ウ	テ	モ	ε	∞
xxxx0100	(5)		$	4	D	T	d	t			、	エ	ト	ヤ	μ	Ω
xxxx0101	(6)		%	5	E	U	e	u			・	オ	ナ	ユ	σ	ü
xxxx0110	(7)		&	6	F	V	f	v			ヲ	カ	ニ	ヨ	ρ	Σ
xxxx0111	(8)		'	7	G	W	g	w			ァ	キ	ヌ	ラ	q	π
xxxx1000	(1)		(	8	H	X	h	x			ィ	ク	ネ	リ	√	x̄
xxxx1001	(2)		)	9	I	Y	i	y			ゥ	ケ	ノ	ル	-1	y
xxxx1010	(3)		*	:	J	Z	j	z			ェ	コ	ハ	レ	j	千
xxxx1011	(4)		+	;	K	[	k	{			ォ	サ	ヒ	ロ	×	万
xxxx1100	(5)		,	<	L	¥	l	|			ャ	シ	フ	ワ	¢	円
xxxx1101	(6)		-	=	M	]	m	}			ュ	ス	ヘ	ン	£	÷
xxxx1110	(7)		.	>	N	^	n	→			ョ	セ	ホ	゛	ñ	
xxxx1111	(8)		/	?	O	_	o	←			ッ	ソ	マ	゜	ö	■

9. Cautions and Handling

General Precautions:

1. LCD panel is made of glass. Avoid excessive mechanical shock or applying strong pressure onto the surface of display area.
2. The polarizer used on the display surface is easily scratched and damaged. Extreme care should be taken when handling. To clean dust or dirt off the display surface, wipe gently with cotton, or other soft material soaked with isoproply alcohol, ethyl alcohol or trichlorotriflorothan. Do not use water, ketone or aromatics and never scrub hard.
3. Do not tamper in any way with the tabs on the metal frame.
4. Do not make any modification on the PCB without consulting.
5. When mounting the LCM, make sure that the PCB is not under any stress such as bending or twisting. Elastomer contacts are very delicate and missing pixels could result from slight dislocation of any of the elements.
6. Avoid pressing on the metal bezel, otherwise the elastomer connector could be deformed and lose contact, resulting in missing pixels and cause rainbow on the display.
7. Be careful not to touch or swallow liquid crystal that might leak from a damaged cell. Any liquid crystal adheres to skin or clothes, wash it off immediately with soap and water.

Static Electricity Precautions:

1. CMOS-LSI is used for the module circuit; therefore, operators should be grounded whenever he/she comes into contact with the module.
2. Do not touch any of the conductive parts such as the LSI pads, the copper leads on the PCB and the interface terminals with any parts of the human body.
3. Do not touch the connection terminals of the display with bare hand; it will cause disconnection or defective insulation of terminals.
4. The modules should be kept in anti-static bags or other containers resistant to static for storage.
5. Only properly grounded soldering irons should be used.
6. If an electric screwdriver is used, it should be grounded and shielded to prevent sparks.
7. The normal static prevention measures should be observed for work clothes and working benches.
8. Since dry air is inductive to static, a relative humidity of 50-60% is recommended.

Soldering Precautions:

1. Soldering should be performed only on the I/O terminals.
2. Use soldering irons with proper grounding and no leakage.
3. Soldering temperature: 280°C+10°C
4. Soldering time: 3 to 4 second.
5. Use eutectic solder with resin flux filling.
6. If flux is used, the LCD surface should be protected to avoid spattering flux.
7. Flux residue should be removed.

Operation Precautions:

1. The viewing angle can be adjusted by varying the LCD driving voltage Vo.
2. Since applied DC voltage causes electro-chemical reactions, which deteriorate the display, the applied pulse waveform should be a symmetric waveform such that no DC component remains. Be sure to use the specified operating voltage.
3. Driving voltage should be kept within specified range; excess voltage will shorten display life.
4. Response time increases with decrease in temperature.
5. Display color may be affected at temperatures above its operational range.
6. Keep the temperature within the specified range usage and storage. Excessive temperature and humidity could cause polarization degradation, polarizer peel-off or generate bubbles.
7. For long-term storage under 40C is required and the relative humidity should be kept below 60%.